Agilent P3211 and P3311 pH Combination Electrodes

pH 电极

Operating Guide

用户手册

Agilent Technologies

Overview

The P3211 and 3311 Refillable pH Combination Electrodes measure pH in aqueous solutions. The refillable reference electrode helps to prolong the service life of the electrode. They are used with the 3200P pH Meter or similar meters.

P3211 Consists of pH-sensing electrode and reference electrode.

P3311 Consists of pH-sensing electrode and reference electrode, and temperature-sensing probe.

WARNING **Use this electrode according to the operating manual to avoid personal injury.**

WARNING **The electrode solution can cause chemical burns or illness if it is taken orally or contacted by human skin. Use protective clothing or gloves to avoid contact. In case of contact, rinse contacted area with tap water or deionized water thoroughly.**

CAUTION The electrode body material is glass. Handle with care to avoid damage to the instrument.

Table 1 P3211 and P3311 pH Combination Electrode specifications

Specification	**P3211**	**P3311**
pH range	0 to 14	0 to 14
Zero potential	7.00 ± 0.5	7.00 ± 0.5
Temperature range	0 to 80 °C	0 to 60 °C
Temperature accuracy		± 0.5 °C
Probe impedance	< 300 Mohm	< 300 Mohm
Reference type	Ag/AgCl	Ag/AgCl
Body material	Glass	Glass
Liquid junction material	Ceramics	Ceramics
Reference solution	3 mol/L KCl containing AgCl	3 mol/L KCl containing AgCl
Cable connector	BNC	BNC + miniDIN
Probe diameter	12 mm	12 mm
Probe length	120 mm	120 mm
Cable length	1000 mm	1000 mm

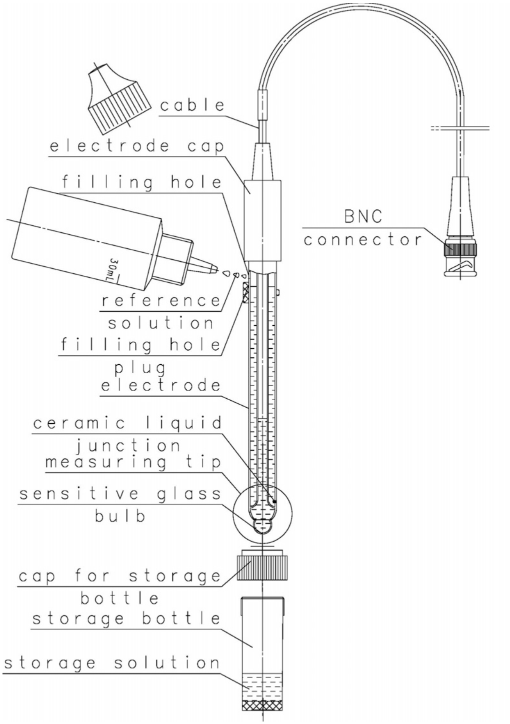

Figure 1 P3211 Combination Electrode assembly

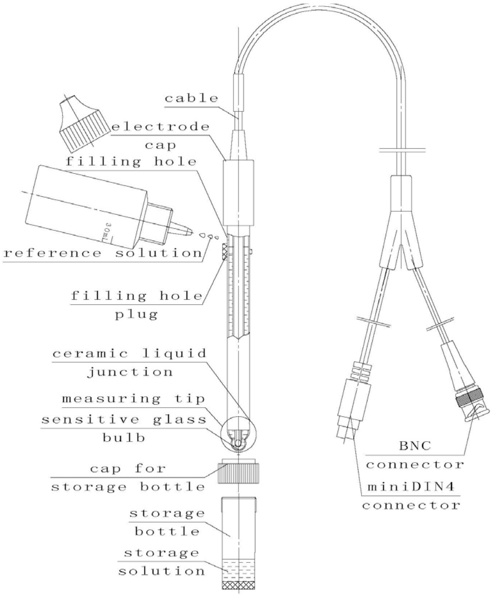

Figure 2 P3311 Combination Electrode assembly

Operation

Preparing the electrode

1 Remove the electrode from the storage bottle. Keep the bottle and cap for future use.
2 Rinse the measuring tip with distilled or deionized water. With the measuring tip downward, swing the electrode several times to eliminate air bubbles near the sensitive bulb.
3 Unplug the filling hole.

Measurement

1 Connect the electrode to the meter.
2 *P3211 only.* Enter the temperature of the calibrating solution.
3 Place the measuring tip in the calibrating solutions, beginning with the most dilute. Calibrate as described in the meter manual.
4 After calibration, place the electrode in the sample solutions. When the readings become stable, record the meter readings.
5 After measurement, rinse the measuring tip with distilled or deionized water. Place the electrode in the storage bottle and finger tighten the cap. To protect the measuring tip, keep 5 to 10 mm between the tip and the bottom of the bottle.

Operating hints

- The main material of the measuring tip is glass. Ensure that the sample solution will not damage the measuring tip before measurement. Do not immerse the measuring tip in any material containing sand or solid.
- During measurement, keep the level of the reference filling solution higher than the sample solution.
- Keep the calibration solution and sample solution flowing at a uniform speed around the electrode or the accuracy may be severely impacted.

- It is normal for a small amount of reference filling solution to leak through the reference junction during electrode use. The reference filling solution contains silver ions and is not suitable for samples that contain protein. The silver ion will precipitate near the liquid junction and damage the electrode.
- White powder or crystals that collect on the electrode during measurement or transportation do not affect the performance of the electrode. Rinse the residue with tap or deionized water.
- Do not soak the electrode in sample solution for a long time. After measurement, rinse the electrode carefully.
- The reading of a solution is affected by its temperature. The pH reading done with a sample solution at 10 °C will be different than a reading with the sample temperature to 25 °C.
- For acidic sample solutions, use pH 4.00 and pH 7.00 standards for calibration. For alkaline sample solutions, use pH 7.00 and pH 10.01 standards.
- Do not apply force to the electrode cap, the cable, or the cable interface.
- Keep the cable interface dry.

Maintenance

Exchange of the Reference filling solution

1. Siphon the electrode reference filling solution and add fresh solution (5190-0545) through the filling hole until the level is 5 mm below the filling hole.
2. Repeat this procedure several times.

Cleaning of inorganics

Soak the measuring tip in 0.1 mol/L HCl or EDTA solution for 15 minutes.

Cleaning of organics

Soak the measuring tip in absolute alcohol or organic solvent that can dissolve the material for 15 minutes.

Cleaning of grease

Soak the measuring tip in warm weakly alkaline detergent for 15 minutes.

Cleaning of protein precipitation

Soak the measuring tip in 0.1 mol/L HCl solution that contains 1% pepsin for 15 minutes.

Electrode restoration

WARNING **HF is lethal. Refer to the HF material safety data sheet before using it.**

1. Soak the sensitive membrane in 4% HF solution for 3 to 5 seconds.
2. Rinse in 0.1 mol/L HCl for 10 seconds.
3. Rinse with distilled or deionized water.
4. After cleaning the electrode, exchange the reference filling solution and soak the measuring tip in reference filling solution for two hours.

Troubleshooting

Meters

Refer to the meter operating manual. Check all related parts, such as the electrode, calibration solution and samples.

Electrode

1. Connect the electrode to the meter. Set the meter to display mV.
2. Place the electrode in pH 4.01 buffer.
3. Record the mV reading in pH 4.01 buffer when the reading becomes stable.
4. Rinse the electrode with distilled or deionized water and place the electrode in pH 10.01 buffer.

5 Record the mV reading in pH 10.01 buffer when the reading becomes stable.
6 If the difference between these two mV readings is in the range of 326 to 366 mV, the electrode is performing properly. If not, clean the electrode. Then repeat the measurements.
7 If the readings are not stable, exchange the reference solution. Repeat this action a few times and repeat the measurements.

Accuracy

1 Choose any two calibration solutions to calibrate the electrode.
2 Use the calibrated electrode to measure the pH of another calibration solution.
3 Compare the theoretical and measured values. Check if the measuring accuracy of the electrode is satisfactory.

Sample

- The electrode is only suitable for measuring the pH value of conventional solutions. When measuring the pH of solutions with low conductivity, high viscosity, or nonaqueous reagents, the response time of the electrode may be prolonged or the measurement accuracy may be affected.
- Use effective calibration solution. Make sure the distilled or deionized water used to prepare the solution meets all requirements. Make sure the calibration solution is not contaminated or beyond its shelf life.

For any other problems during electrode use, contact your Agilent Technologies customer service representative.

Storage

Place the electrode and storage bottle in the packing box and store it at ambient temperature in a dry location.

Agilent P3211 and P3311

pH 电极

用户手册

Agilent Technologies

概述

实验室常规 pH 值测量用可充式 pH 复合电极，与 3200P 仪器或类似仪器配套使用。

安全提示

1 按使用说明使用电极。
2 电极附带的填充液不宜口服或接触人体敏感器官，如意外接触，应立即用自来水或去离子水清洗。
3 本电极主体材料为玻璃，在没有成年人监管时，不要让十八岁以下人接触或使用本电极。
4 在储运或使用过程中，电极上可能有少量白色粉末或晶体附着，这是由部分渗出的参比填充液或保存溶液失去水分引起，可用自来水或去离子水冲洗去除，不影响电极的性能。

技术参数

电极型号	**P3211**	**P3311**
测量范围	0–14 pH	0–14 pH
零电位	7.0±0.5 pH	7.0±0.5 pH
适用温度范围	0–80 ℃	0–60 ℃
温度测量误差	—	±0.5 ℃
电极内阻	< 300 MΩ	< 300 MΩ
参比系统	Ag/AgCl	Ag/AgCl
外壳材质	玻璃	玻璃
液接界材料	陶瓷	陶瓷
参比填充液	含 AgCl, 3 mol/L KCl	含 AgCl, 3 mol/L KCl
导线接口	BNC	BNC+miniDIN4

电极型号	P3211	P3311
电极直径	12 mm	12 mm
电极长度	120 mm	120 mm
导线长度	1000 mm	1000 mm

电极插图

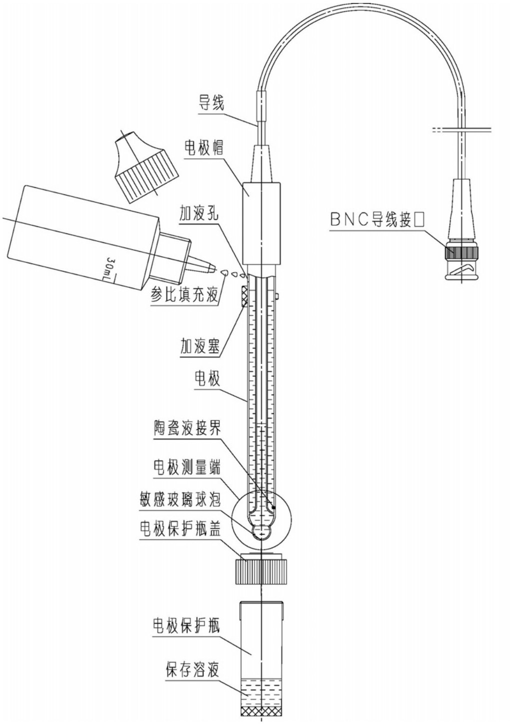

图 1 P3211 型 pH 复合电极插图

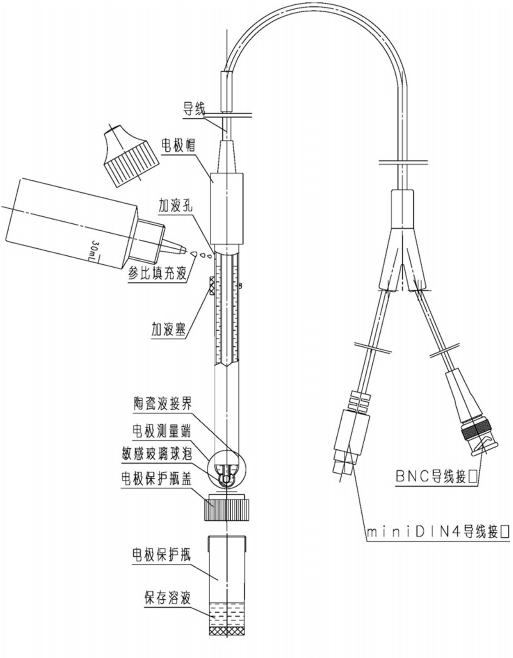

图 2　　P3311 型 pH 复合电极插图

使用步骤

电极准备

1 旋开电极保护瓶盖，依次取下电极保护瓶、电极保护瓶盖，将电极保护瓶开口向上水平放置待用。

2 用蒸馏水或去离子水冲洗电极测量端，将电极测量端向下，空甩电极数次。

3 开启加液塞。

电极测量

1 将电极与仪器连接，按仪器说明输入校正溶液的温度值。

2 将电极测量端依次浸没于校正溶液中，按照仪器说明校正电极。

3 校正完毕，将电极测量端浸于被测溶液中，待仪器读数稳定后，读取读数。

4 测量完毕，关闭加液塞，冲洗电极测量端，依次将电极保护瓶盖和电极保护瓶安装在电极外壳上，安装时电极与电极保护瓶的底部保持 5–10 mm 距离以免造成电极损坏 , 并旋紧电极保护瓶盖。

储存方法

电极放回电极包装盒内，室温干燥保存。

注意事项

1 电极测量端的主要材料为玻璃，测量前应确认被测溶液不会对电极测量端造成损伤。

2 电极测量端易碎，使用时注意保护。避免与能划伤玻璃的含砂溶液或固体接触。

3 测量时，电极的参比填充液高度应高于被测溶液。

4 保持校正溶液和被测溶液的流速一致，否则会引起测量误差。

5 正常使用时，应有适量的参比填充液通过液接界渗出。因电极参比填充液内含银离子，因此电极不适合经常测量含蛋白质的溶液，否则银离子会逐渐沉淀，阻塞液接界，造成电极损坏。

6 请勿将电极长时间浸泡于被测溶液内，电极使用完毕，请及时对电极进行清洗。

7 溶液的 pH 值受温度影响。例如，被测溶液的温度为 10 ℃，此时仪器显示的 pH 值是该溶液 10 ℃时的 pH 值。如需得到 25 ℃下的样品 pH 值，则需把样品温度升至 25 ℃后进行测量，仪器的温度补偿功能不能将溶液 10 ℃时测量的 pH 值转换为 25 ℃时的 pH 值。

8 校正电极时，若被测溶液的 pH 值为酸性，建议使用 pH 4.00 和 pH 7.00 校正溶液；若被测溶液的 pH 值为碱性，建议使用 pH 7.00 和 pH 10.01 校正溶液。

9 电极帽、导线以及导线接口部分应避免受力，以免损坏。

10 导线接口必须保持干燥。

电极维护

更换参比填充液

将电极的参比填充液吸空，从加液孔注入新鲜的参比填充液 （5190-0545）至距离加液孔 5 mm 左右处。再次吸空参比填充液，从加液孔注入新鲜的参比填充液至距离加液孔 5 mm 左右处。

电极清洗和修复

1 无机物清洗：
将电极测量端浸于 0.1 mol/L HCl 或 EDTA 溶液中 15min。

2 有机物清洗：
将电极测量端浸于无水乙醇 （或能够溶解该有机物的溶剂）中 15 min。

3 油脂类清洗：
将电极测量端浸于温热的弱碱性洗涤剂中 15 min。

4 蛋白质沉淀的清洗：
将电极测量端浸于含 1% 胃蛋白酶的 0.1 mol/L 盐酸溶液中 15 min。

5 玻璃敏感膜修复 （注意：HF 是有毒物质，使用前阅读该物质使用说明）：
将电极测量端浸于 4% HF 溶液中 3–5 s，然后用 0.1 mol/L HCl 漂洗数次，用蒸馏水或去离子水清洗。

电极清洗完毕，应将电极测量端浸没于参比填充液内 2h。

疑难解答

电极使用中发现异常情况，请按下列步骤查找原因

仪器

参看仪器说明书的相关部分
查看仪器、电极、校正溶液、样品等相关部分之间的衔接应良好。

电极

1 确认电极性能良好

a 将电极与仪器连接，仪器显示模式调整为 mV 读数。

b 将电极测量端依次浸于 pH 4.00 和 pH 10.01 校正溶液中，待仪器读数稳定后分别记录 mV 值。

c 两次记录的 mV 值绝对值之和应介于 326 至 370mV 之间，则电极性能良好，否则对电极进行维护。

2 检查电极测量准确度

a 用任意两种校正溶液对电极进行校正。

b 用电极测量其他校正溶液的 pH 值，将测量值与被测校正溶液的理论值进行比对，查看电极测量准确度是否满足用户需求。

校正溶液

1 校正溶液来源有效。
2 配制校正溶液用的蒸馏水或去离子水应符合要求。
3 校正溶液应在有效期内，不污染或变质。

样品

电极仅适合测量常规溶液的 pH 值，在测量低电导率溶液、粘度较大或非水试剂等非常规溶液的 pH 值时，电极的响应时间会延长或测量结果会受影响。

如在电极使用过程中有其他疑问，请联系售后服务部门。

如需购买，请与安捷伦经销商联系或者登陆安捷伦官方网站。

www.agilent.com

© Agilent Technologies, Inc. 2012

Printed in China 03/2012
First edition, March 2012

5973-1790

Agilent Technologies